Product Information

Category: Sunroof

Document Number: PI060BC

Date: 5/07/2011

Description: **Sunroof Relay Kit Recommended Wiring (5010291A)**

Overview

Thank you for choosing Webasto as your source for all of your aftermarket sunroof needs, this document was created to help guide you through the installation of your Sunroof Relay kit.

Even though the use of a relay is not required for your sunroof to operate properly, Webasto **strongly** recommends one be used to protect both the sunroof as well as the Vehicle Electrical System. This Kit was developed to provide all the necessary components as well as some simple wiring diagrams to make installing a Relay into your Webasto Sunroof as easy as possible. This kit includes the following:

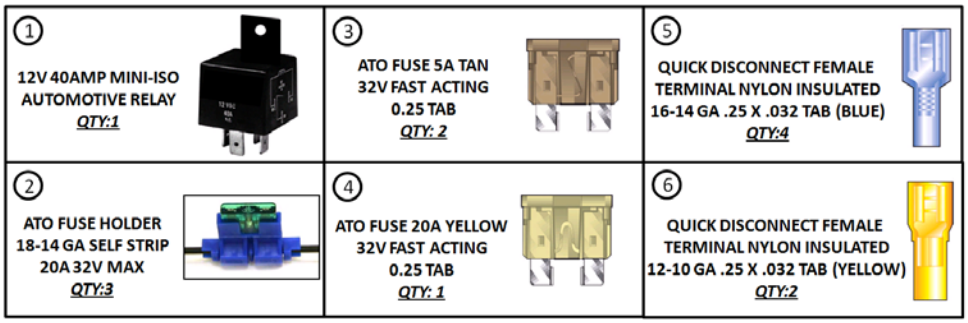

The remainder of this document contains a series of diagrams that outline the recommended wiring for the current lineup of Webasto Aftermarket Sunroofs. Please take a moment to review these diagrams in their entirety and choose the one that best fits your product/application and use it as a reference during the installation. If you cannot find a diagram which adequately fits your product/application or you have any additional questions please contact our technical support team at (800) 860-7866 or via email at: info-us@webasto.com.

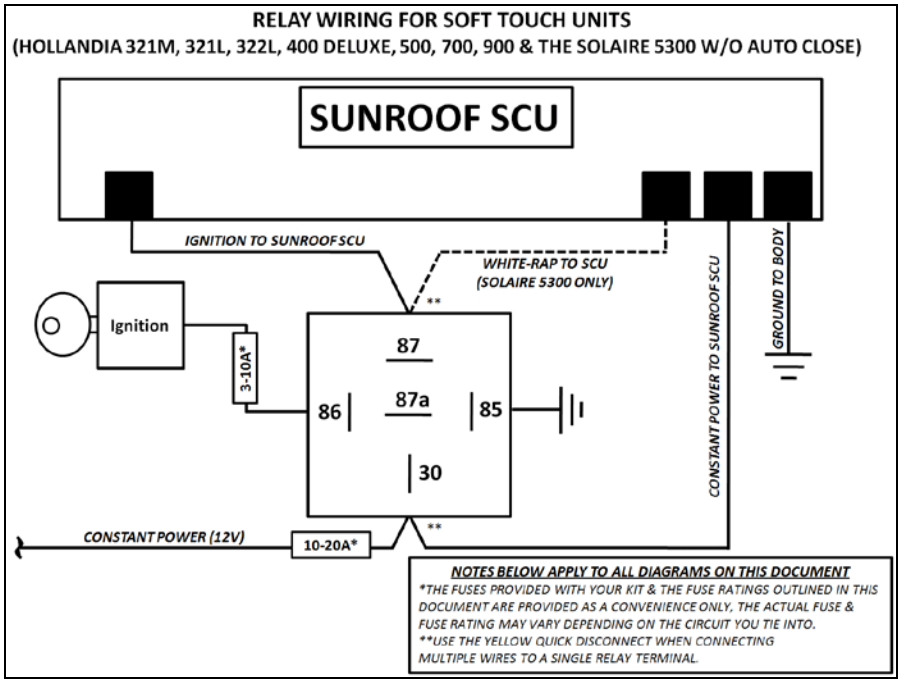

Webasto
Feel the drive

RELAY WIRING FOR PRESS & HOLD UNITS
(HOLLANDIA 311M, 312L, 311L, 310L, 400, 600)

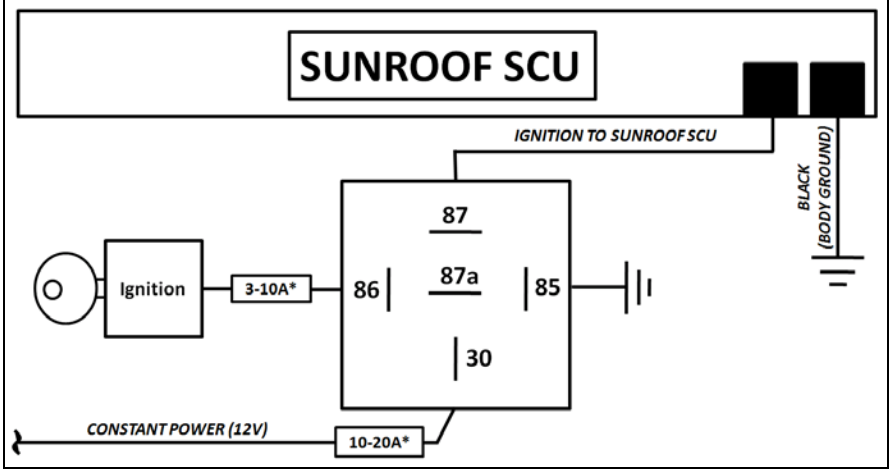

RELAY WIRING SOLAIRE 5300
(CONFIGURATION FOR IGNITION OFF AUTO CLOSE)

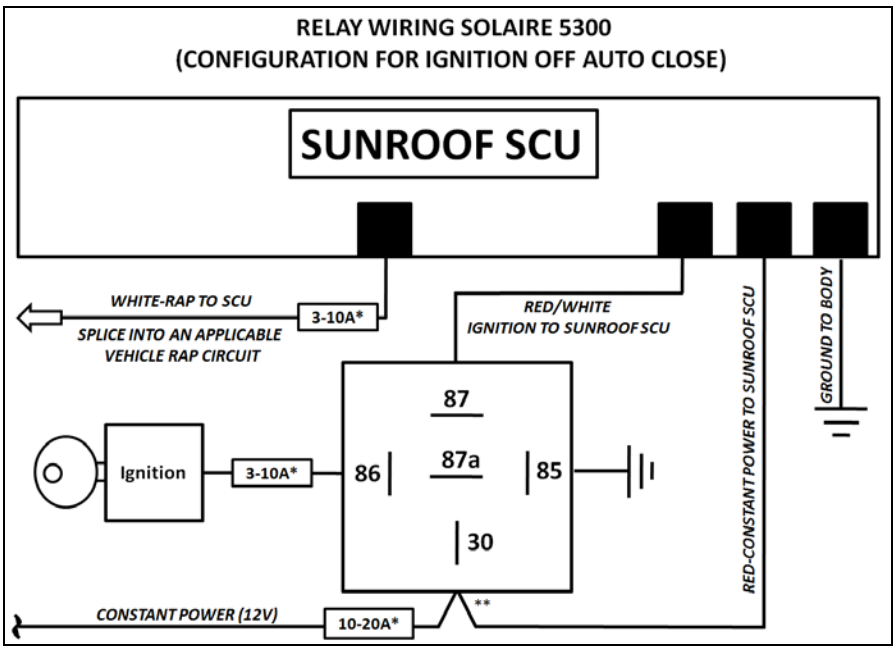
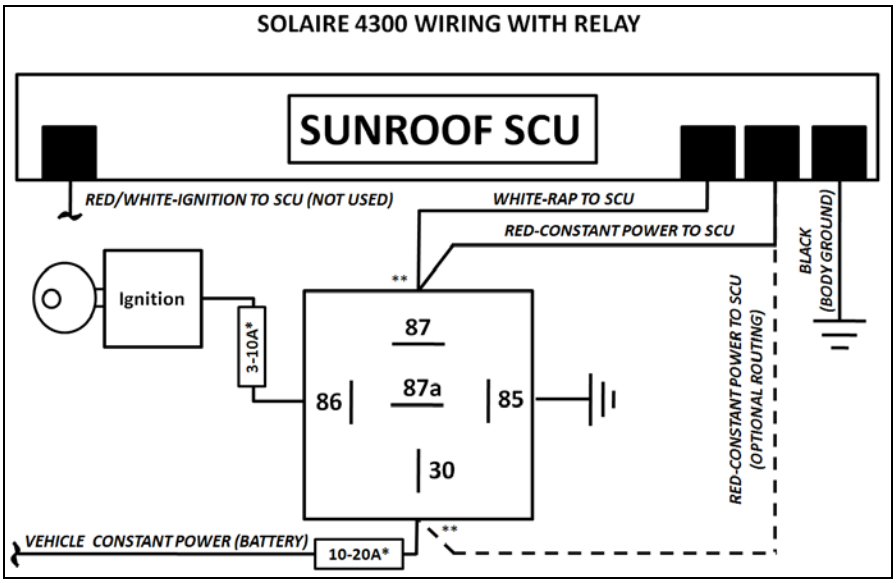
SOLAIRE 4300 WIRING WITH RELAY