FCF SPARE PARTS R22 115V / 230V (60 Hz)

Drawing Position	FCF Spare Parts		R22 115V (60 Hz)				R22 230V (60 Hz)			
	Part #	Description	FCF0005000	FCF0009000	FCF0012000	FCF0016000	FCF0005023	FCF0009023	FCF0012023	FCF0016023
1	FCFSP0001A	Solenoid Reversing Valve 115V	X	X	X	X				
	FCFSP0060A	Solenoid Reversing Valve 230V					X	X	X	X
2	FCFSP0003A	Evaporator Temperature Sensor	X	X	X	X	X	X	X	X
3	FCFSP0002A	Return Air Temperature Sensor	X	X	X	X	X	X	X	X
4	FCFSP0004A	Electrical Box Cover	X	X	X	X	X	X	X	X
5	FCFSP0062A	Capacitor Compressor 15uF/450V					X	X		
	FCFSP0069A	Capacitor Compressor 25uF/450V							X	
	FCFSP0077A	Capacitor Compressor 30uF/450V								X
	FCFSP0005A	Capacitor Compressor 35uF/450V	X							
	FCFSP0019A	Capacitor Compressor 45uF/450V				X				
	FCFSP0018A	Capacitor Compressor 50uF/450V		X	X					
6	FCFSP0059A	Terminal Board in Electrical Box	X	X	X	X	X	X	X	X
7	FCFSP0063A	Capacitor Fan 3.5uF/450V					X		X	
	FCFSP0067A	Capacitor Fan 4uF/450V						X		X
	FCFSP0006A	Capacitor Fan 15uF/450V	X	X	X	X				
8	FCFSP0007A	Transformer 115V	X	X	X	X				
	FCFSP0065A	Transformer 230V					X	X	X	X
9	FCFSP0089A	Circuit Board Fuse 3.15 Amp	X	X	X	X	X	X	X	X
10	FCFSP0008A	Circuit Board 115V Tan	X	X	X	X				
	FCFSP0074A	Circuit Board 115V Green								
	FCFSP0066A	Circuit Board 230V Tan					X	X	X	X
	FCFSP0071A	Circuit Board 230V Green								
11	FCFSP0009A	Electrical Box	X	X	X	X	X	X	X	X
12	FCFSP0010A	Digital Display	X	X	X	X	X	X	X	X
12a	FCFSP0078A	Display Cable 26 ft.	X	X	X	X	X	X	X	X
12b	FCFSP0076A	Display Cable 49 ft.	X	X	X	X	X	X	X	X
13	FCFSP0011A	Duct Ring 4"	X	X			X	X		
	FCFSP0017A	Duct Ring 5"			X	X			X	X
14	FCFSP0012A	Blower Assy 5k 115V	X							
	FCFSP0074A	Blower Assy 5k 230V					X			
	FCFSP0022A	Blower Assy 9k 115V		X						
	FCFSP0086A	Blower Assy 9k 230V						X		
	FCFSP0024A	Blower Assy 12k 115V			X					
	FCFSP0094A	Blower Assy 12k 230V							X	
	FCFSP0028A	Blower Assy 16k 115V				X				
	FCFSP0105A	Blower Assy 16k 230V								X
15	FCFSP0061A	Rubber Stopper for Base Pan	X	X	X	X	X	X	X	X
16	FCFSP0058A	Hold Down Clamp	X	X	X	X	X	X	X	X
17	FCFSP0015A	Handle for Base Pan 5k	X				X			
	FCFSP0021A	Handle for Base Pan 9k,12k & 16k		X	X	X		X	X	X
18	FCFSP0054A	Condensor Clip Single 5k,9k & 12k	X	X	X		X	X	X	
	FCFSP0026A	Condensor Clip Single 16k				X				X
19	FCFSP0055A	Condensor Clip Double 5k,9k & 12k	X	X	X		X	X	X	
	FCFSP0030A	Condensor Clip Double 16k				X				X
20	FCFSP0016A	Air Filter 5k	X				X			
	FCFSP0023A	Air Filter 9k		X				X		
	FCFSP0027A	Air Filter 12k			X				X	
	FCFSP0031A	Air Filter 16k				X				X
21	FCFSP0036A	Compressor 5k 115V R22	X							
	FCFSP0082A	Compressor 5k 230V R22					X			
	FCFSP0043A	Compressor 9k 115V R22		X				X		
	FCFSP0093A	Compressor 9k 230V R22								
22	FCFSP0013A	Remote Control	X	X	X	X	X	X	X	X
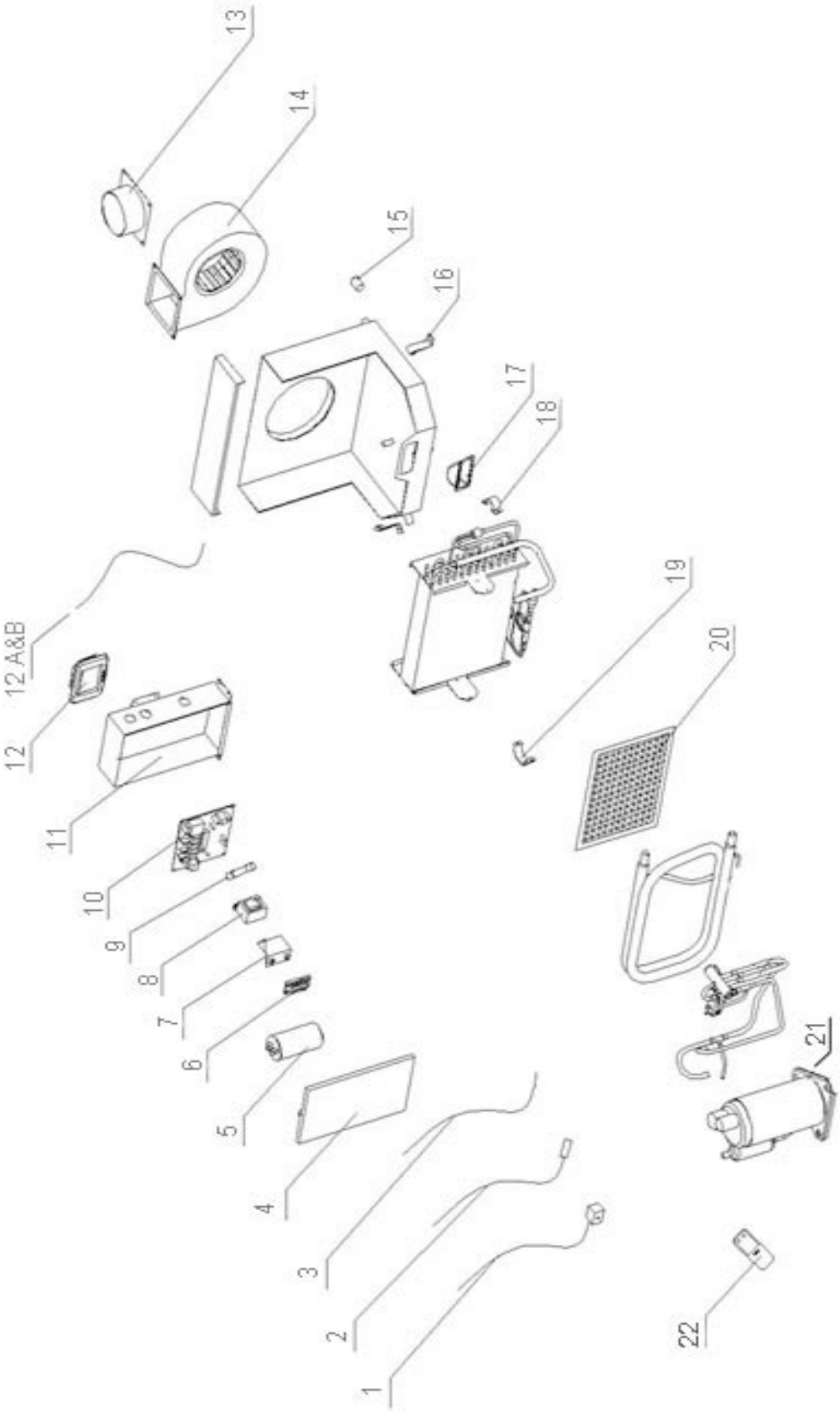
FCF SPARE PARTS R22 115V / 230V (60Hz)